www.reelschematic.com

1090 / 1120

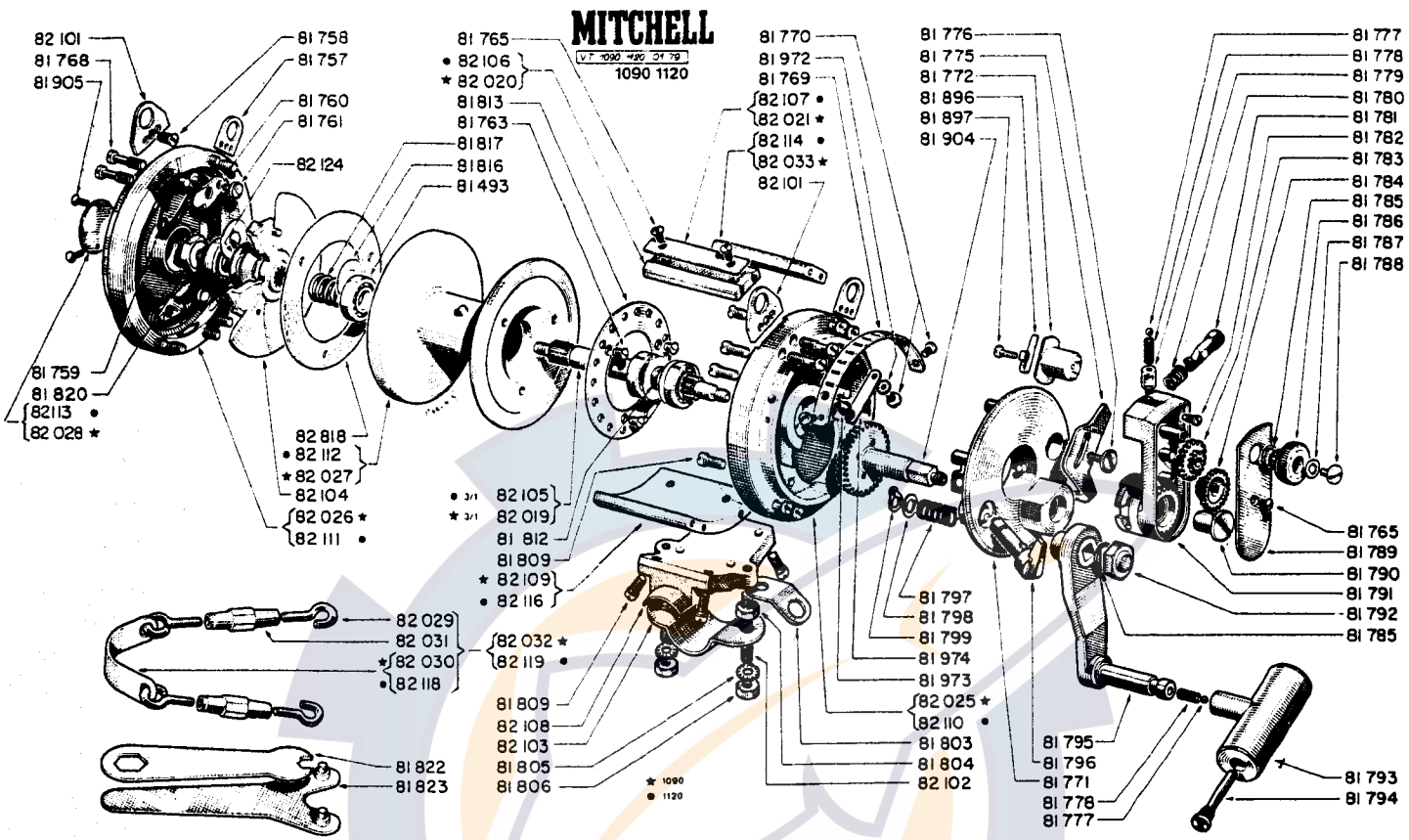

CODE NO.	DESCRIPTION	SUGGESTED RETAIL
81493	Ball Bearing Stainless Steel	12.40
81757	Harness Lug	10.50
81758	Harness Lug Screw	1.30
81759	Anti Reverse Dog Spring	.20
81760	Anti Reverse Dog	4.00
81761	Anti Reverse Dog Screw	1.85
81763	Click Plate Screw	.90
81765	Name Plate Drag Lever Plate Screw	1.00
81768	Side Plate Screw	1.20
81769	Drag Index Plate	8.00
81770	Index Plate Screw	.90
81771	Drag Lever Plate	154.60
81772	Strike Stop Guide	5.80
81775	Strike Stop Lever	8.50
81776	Strike Stop Lever Screw	2.20
81777	Lube Port Ball	.25
81778	Lube Port Ball Spring	.20
81779	Drag Index Dog	24.70
81780	Release Button Spring	.60
81781	Drag Lever Release Button	23.20
81782	Release Button Screw	.65
81783	Drag Transfer Gear N 1	17.90
81784	Drag Transfer Gear N 2	18.20
81785	"O" Ring Seal	.85
81786	Drag Adjusting Knob	22.10
81787	Drag Adjusting Knob Shim	.45
81788	Drag Adjusting Knob Screw	1.30
81789	Drag Lever Cover Plate	11.70
81790	Drag Lever Nut	5.10
81791	Main Drag Gear Lever Assembly	261.50
81792	Handle Lock Nut	10.00
81793	Handle Knob	43.60
81794	Handle Knob Screw	2.85
81795	Handle Shank	31.60
81796	Click Button	17.50
81797	Click Button Spring	.30
81798	Click Button Washer	.40
81799	Click Button "C" Lock	2.65
81803	Safety Lug	.80
81804	Stud Lock Nut	3.65
81805	Rod Clamp Lock Washer	.40
81806	Rod Clamp Lock Nut	2.85
81809	Reel Foot Drag Lever Plate Screw	1.05
81812	Ball Bearing Spacer	3.85
81813	Click Plate	4.90
81816	Ball Bearing Shield	.50
81817	Main Shaft Spring	1.05
81820	Main Shaft Hex Nut	3.40
81822	Utility Tool	.60
81823	Spanner Wrench	2.10
81896	Stop Guide Spring	1.60
81897	Stop Guide Spring Screw	1.30
81904	Drive Gear (3/1 Ratio)	76.20
81905	Emblem Screw	.50
81972	Fan Washer	1.60
81973	Plunger	1.45
81974	Plunger Spring	2.65
82019	Main Shaft (3/1 Ratio)	88.70
82020	Name Plate Pillar	40.20
82021	Name Plate	4.25
82025	Right Side Plate	260.30
82026	Left Side Plate	240.05
82027	Spool	123.00
82028	Emblem (3/1 Ratio)	21.80
82029	Turnbuckle Hook Screw	2.50
82030	Rod Brace Clamp	8.50
82031	Turnbuckle Nut	4.40
82032	Forward Rod Brace Complete	22.45
82033	Upper Pillar	27.80
82101	Rod Clamp N 2	4.25
82102	Rod Clamp Stud	4.25
82103	Rod Clamp	16.00
82104	Ferodo Drag Plate w/Ratchet	144.00
82105	Main Shaft	89.50
82106	Name Plate Pillar	68.80
82107	Name Plate	4.25
82108	Reel Foot	108.50
**82109	Lower Pillar	94.00
82110	Right Side Plate	260.30
82111	Left Side Plate	240.00
82112	Spool	141.75
82113	Emblem	21.80
82114	Upper Pillar	57.60
82116	Lower Pillar	94.00
82118	Rod Brace Clamp	13.30
82119	Forward Rod Brace Complete	23.60
82124	Drag Washer	1.00
82818	Spindle	.40

**When present inventory is depleted, this part will no longer be available.